# 1. CONTENTS


1. Contents ..... 1
2. Control Location ..... 3
3. Before Riding ..... 4
4. Safe Riding ..... 4
5. Riding ..... 5
6. Use Genuine Spare Parts ..... 5
7. Use of Each Component ..... 6
   - Gauges ..... 6
   - Operation of Ignition Switch ..... 7
   - Engine Control Switch ..... 8
   - Use of Buttons ..... 8
   - Seat Lock ..... 9
   - Fuel Tank Cap ..... 9
   - Safety Helmet Hook ..... 10
   - Storage Box ..... 10
   - Brake ..... 10
   - Important Points and Cautions for Starting Engine ..... 11
   - The Best Way to Ride off ..... 11
   - The Control of Throttle Valve Handle ..... 12
   - Parking Method ..... 12
8. Inspection and Maintenance before Riding ..... 13
   - Routine Inspection ..... 13
   - Fuel Inspection ..... 13
   - Engine Oil Inspection and Change ..... 14
   - Transmission Oil Inspection and Change ..... 14
   - Inspection and Adjustment of Brake Free Play ..... 15
   - Disc Brake Inspection (Depending on Models) ..... 16
   - Throttle Valve Handle Clearance Adjustment ..... 17
   - Tire Inspection ..... 17
   - Steering Handle Front Shock Absorbers Inspection ..... 18
   - Inspection and Maintenance of Battery ..... 18
   - Checking and Changing Fuses ..... 19
   - Checking the Spark Plug ..... 19
   - Checking the Front and Rear Lights ..... 19

# 1. CONTENTS

Checking the Brake Light ..... 20
Checking the Turn Signal Lights and Horn ..... 20
Checking for Fuel Leakage ..... 20
Checking the Lubrication of Body's Various Mechanisms ..... 20
Checking the Air Cleaner ..... 21
9. When there is an Abnormal Condition or a Trouble ..... 22
Diagnosis when Engine does not Start ..... 22
10. C.D.I. Electrical Ignition System ..... 23
11. Suggestions on Engine Fuel ..... 23
12. Transmission Oil ..... 23
13. Cautions for Riding Scooter ..... 23
14. Periodical Maintenance Schedule ..... 24
15. Specification ..... 25

# 2. CONTROL LOCATION

**HU05 / HU10 SERIES**

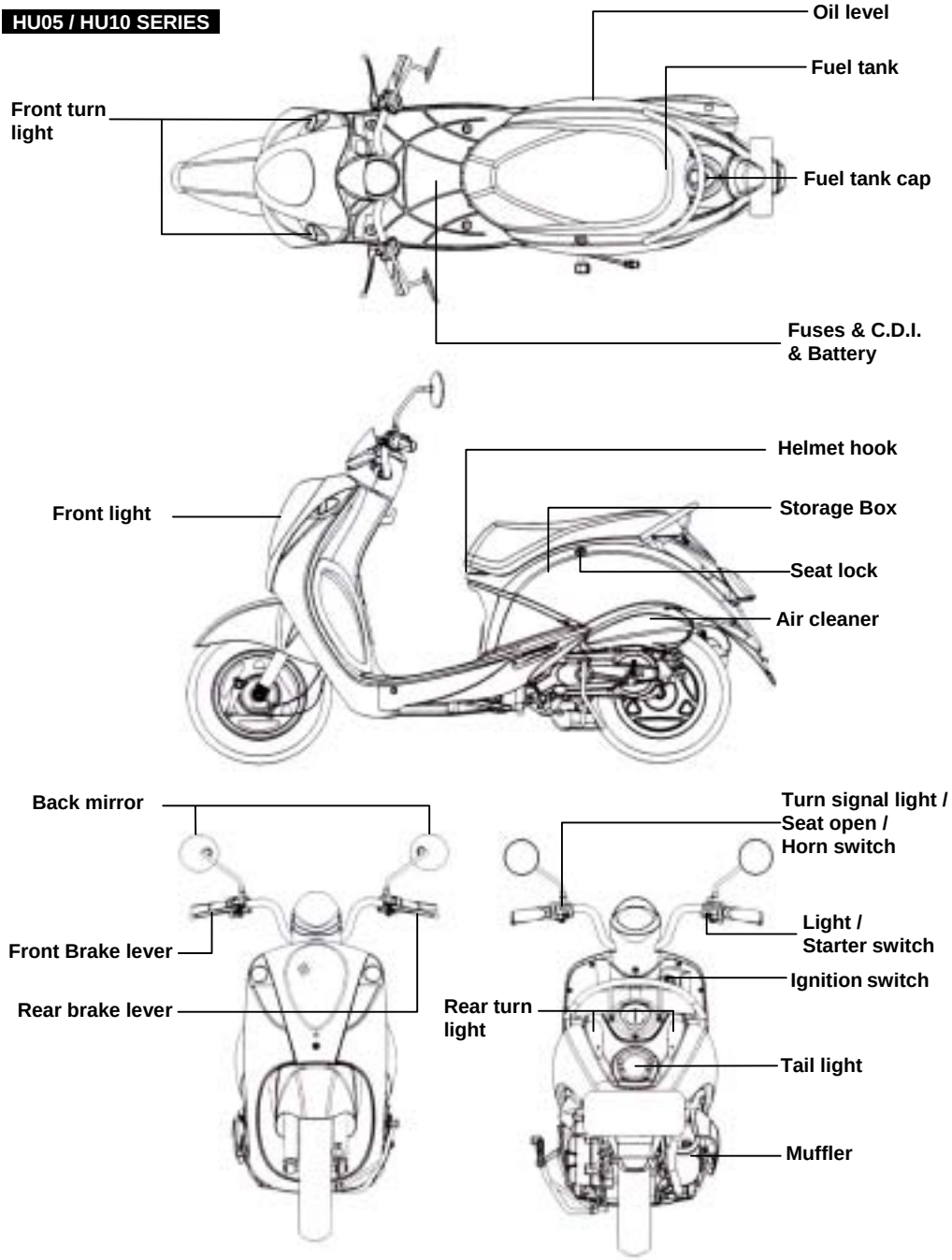

# 3. BEFORE RIDING

This manual describes the correct usage of this scooter including safety riding, simple inspection methods and so on.
For a more comfortable and safety riding, please read this manual carefully.

For your benefit, please ask your SANYANG dealer the operating manual and carefully read the following：

- Correct use of the scooter.
- Pre-delivery inspection and maintenance.

**Thank you very much for your patronage**
In order to maximize your scooter's performance, a periodical inspection and maintenance should be completely carried out.
We recommend that after riding your new scooter for the first 300 kilometers, you should take your scooter to the original dealer for an initial inspection, and to have your scooter inspected periodically every 1000 kilometers thereafter.

- In case the scooter's specifications and construction are modified and different from the photos and diagrams on the owner's manual / catalogues, the specifications and construction of the actual scooter shall prevail.

# 4. SAFE RIDING

It is very important to be relax and clothe properly when riding, observe traffic regulations, do not rush, always ride carefully and relaxed.
Usually, most people would ride their newly bought scooter very carefully, but after they became familiar with their scooters, they tended to become reckless which may result in an accident.

**To remind you**：

- Please wear a safety helmet, and properly tighten the chin belt when riding a scooter.
- Clothes with open or loose cuffs may be blown by wind and cause the cuffs to get caught on the steering handle and thus affects riding safety.
- So, put on clothes with tight sleeves.
- Hold the steering handle by both hands when riding. Never ride with only one hand.
- Observe the speed limit.
- Wear suitable low-heel shoes.

**Perform periodical maintenance and inspection in accordance with the schedule.**

**WARNING!!**

- To avoid getting burned by exhaust pipe when taking a passenger. Make sure your passenger has put his/her feet on the pedals.
- After running, the exhaust pipe is very hot, be careful not to get burned when conducting an inspection or maintenance.
- After running, the exhaust pipe is very hot, select a suitable location to park your scooter to avoid others getting burned by the exhaust pipe.

**CAUTION**：

Modified scooter will affect its structure or performance, and cause poor engine operation or exhaust noise, which will result in shortening the scooter's service life.
Besides, modification is illegal and does not conform to the original design and specifications.
A modified scooter will not be covered by warranty, therefore, do not modify your scooter at will.

# 5. DRIVING

Keep the related parts of your body such as arms, palms, lumbar, and toes relax and ride with the most comfortable posture in order to be able to react quickly whenever it is necessary.

- Rider's posture will greatly affect riding safety. Always keep your body's gravity in the center of the seat, if your body's gravity is on the rear part of seat, the front wheel load will be reduced, and this will cause the steering handle shaking. It is dangerous to ride a scooter with an unstable handle.
- It will be much easier to make a turn if rider inclines his body inward when turning. On the other hand, the rider will feel unstable if his body and the scooter do not incline.
- The scooter is hard to control on a bumpy, unleveled, unpaved road, try to know the road conditions in advance, slow down and use your shoulder's force to control the handle.
- Suggestion: Do not load objects on the front pedals unnecessarily, to avoid affecting the riding safety and the operation of steering handle.

**CAUTION：**

The rider's feeling on the handle is slightly different with a load or without a load.
Overload may cause the handle to swing and affects the riding safety.
Therefore, do not overload your scooter.

**CAUTION：**

- Do not place flammable materials such as rags between the body side cover and engine to avoid components damaging by fire.
  Do not load objects on areas not specified for loading to avoid damage.

**SUGGESTION**

To maximize the scooter's performance and prolong its service life:
The first month or first 1000km is the wear- in period for the engine and components.
Avoid rapid acceleration, and keep the speed below 60km/hr.

# 6. USE GENUINE SPARE PARTS

In order to maintain the scooter's best performance, each part's quality, material, and machined precision must conform with the design requirements.

**"SYM Genuine Spare Parts"** were made from the same high quality materials used for the original scooter.

No parts would be sold to the market until they could meet the designed specifications through sophisticated engineering and stringent quality control.

Therefore, it is necessary to purchase **"SYM Genuine Spare Parts"** from **"SYM Authorized Dealers or Franchised Dealers"** when replacing spare parts.

If you buy cheap, or fake substitute parts from the market, no guarantee can be provided either for the quality or durability.

Also, it may result in unexpected troubles and lower the scooter's performance.

- Always use **SYM Genuine Spare Parts** to keep your scooters pure blood and to ensure its long service life.

# 7. Use of Each Component

(The following is SYM 4 stroke air cooling 50 c.c / 100 c.c. scooter's basic operation, and they could vary from different individual models. Please consult the end of this manual.)

**GAUGES**

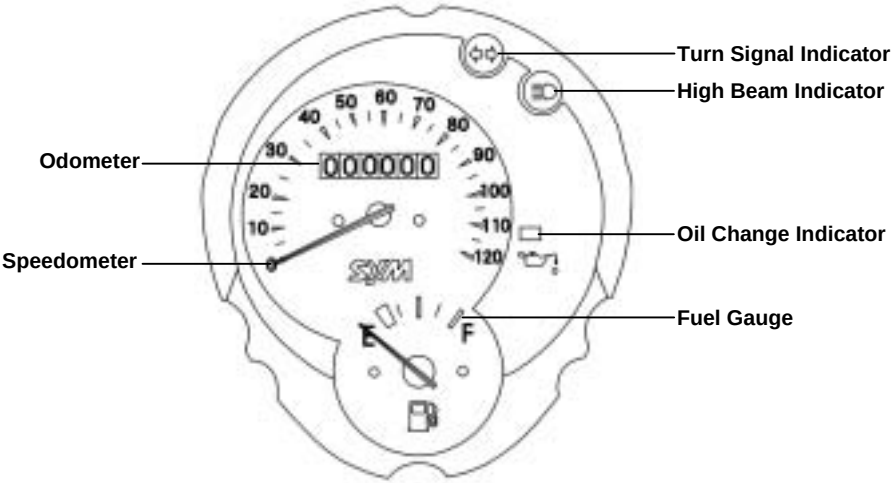


- **Speedometer：**
  Indicates riding speed.
- **Odometer：**
  Indicates total accumulated distance traveled.
- **High Beam Indicator**：
  This indicator comes on with high beam headlight is turned on.
- **Turn Signal Indicator**：
  The left or right Indicator will be flashing according to the operated directions of turn signal light switch when it is turned on.
- **Fuel Gauge：**
  The pointer in this gauge shows how much fuel remains in the tank.
  The pointer stays in "E" position when key switch is turned to "⊠"

- **Engine Oil Change Indicator：**
  This indicator shows when to change engine oil by colors. Usually, the indicator will be in green. But it will be in red color when the scooter has been ride approximately 1,000 km. Then, it means you should add or change the engine oil. After replacing the engine oil, please insert the key into the relief hole as shown on the right. The indicator will then turn from red to green.

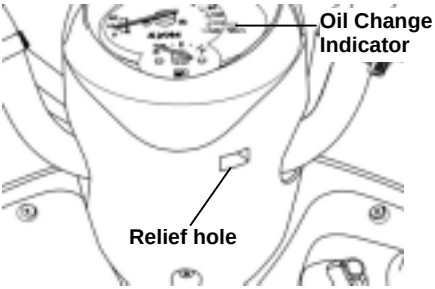

## OPERATION OF IGNITION SWITCH

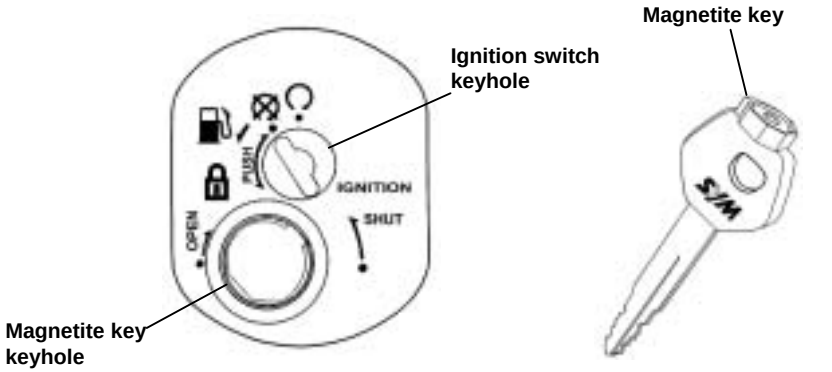


IGNITION SWITCH　　IGNITION SWITCH KEY

**MAGNETITE KEY：**

- Insert your magnetite key into the magnetite keyhole, and turn it to right ignition keyhole block board can be to open.
- When close ignition keyhole. You just push the Ignition keyhole block board push rod, and ignition keyhole can be to close.

**IGNITION SWITCH：**

"ON" position (engine start)：

- Engine can be started in this position.
- Ignition switch key can not be removed.

"OFF" position (engine shut off)：

- Engine is shut off and can not be started in this position.
- Ignition switch key can be removed.

"OPEN" position (fuel tank cap open)：

- How to open：Insert your key into the ignition switch, and turn it to the left.
- How to lock：Push the fuel tank cap and it locks automatically.

"LOCK" position (steering handle lock)：

- Turn the steering handle to left and press ignition switch key down and then lightly turn it to left to the "." position.
- The steering handle is locked in this position.
- Ignition switch key can be removed.
- When unlocking, simply turn the key from "" to ""

**CAUTION：**

- Never operate the ignition switch key when the scooter is running. To turn the ignition switch to "" will shut off the electrical system and that may result in a dangerous accident. Therefore, the ignition switch can only be turned off after the scooter has been completely stopped.
- Always remove the key and be sure to take the key away with you after locking the steering handle before leaving your scooter.
- If ignition switch remains in the "ON" position for a prolonged period after the engine has been stopped, the battery's capacity will be reduced and this may affect the engine's start ability. Make sure to take the key away with you before you lock your seat.

# 7. Use of Each Component

## ENGING CONTROL SWITCH

- This switch is located in the luggage box, under the seat.
- To set on the ENG. control switch, switch it to 〝ON〞 or 〝🔒〞 .
- Switch to 〝OFF〞 或 〝🔒〞 , before start the engine.
- Be sure the seat locked preperly after set on the switch.

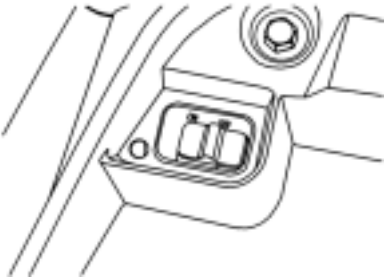

## USE OF BUTTONS

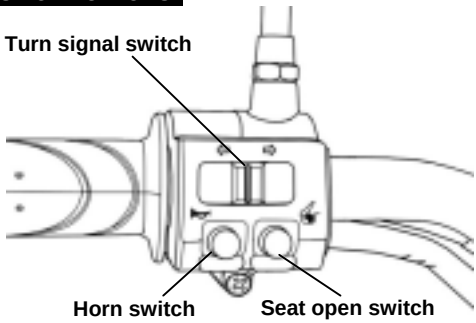


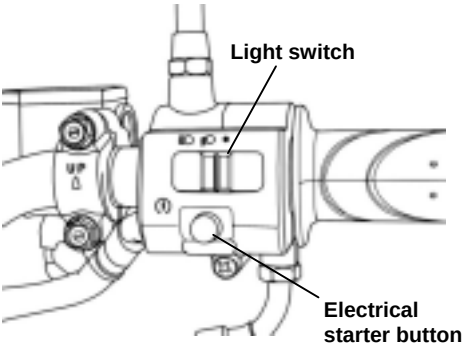


- **Light switch**：

This is for high beam.

This is for low beam. (Please turn to low beam when riding in city)

When the switch is turned to this position, all lights will go off.

- **Electrical starter button**：

This is a starting motor button (switch) for engine starting.

With the main switch " " position, press this button while holding the front or rear brake lever will start the engine.

⚠ **CAUTION:**

- Release this button immediately after engine has been started, and never press the button again to avoid damaging the engine.
- This mechanism is a safety design. The engine can only be started after the front or rear brake lever (pedal) has been applied.
- Do not use light system. Turn headlight and turn signal lights to the “ ” position when the engine is being started.

- **Turn Signal Switch**：
  Turn signal lights are used when turning left/right or changing lane.
  Turn ignition switch to "", and slide the turn signal switch to left or right. Then, the turn signal lights will flash.
  To release, simply return the turn signal light button to the original position.

  Right-side turn signal light flashing means you intend to make a right turn.

  Left-side turn signal light flashing means you intend to make a left turn.

- **Seat Open Switch**：(option)

  Turn ignition switch to "" position and press this button down. Then, the seat can be open.

- **Horn Switch**：

  Press this button, when ignition switch is in the "" position, the horn will sound.

> **CAUTION**：
> Do not press this button when you are in the area where there's no honking.

## SEAT LOCK

- **Unlock**：
  1. Insert the ignition switch key into lock located under seat left (front) and turn to right to unlock.
  2. Press the seat open switch (SEAT OPEN)。
- **Lock**：
  Press the seat down and it will be locked automatically.

After the seat has been locked, check to make sure it has been locked properly by lightly lifting the seat.

> **CAUTION**：
> - Be sure to remove the key after the seat has been locked.
> - Do not put the key inside the storage box after unlocking to avoid the key being locked inside the storage box when the seat is pressed down automatically.

## FUEL TANK CAP

1. Insert ignition switch key into the ignition switch, and turn the key to the left, then the cap can be removed.
2. Do not fill above the fuel upper limit when refueling.
3. Turn the fuel tank cap right, and simply push the fuel tank cap. Fuel tank cap can be locked.

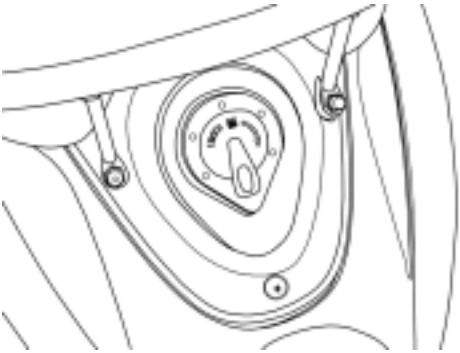

**CAUTION**：

- Main stand should be put down on the ground, engine should be shut off and flames should be strictly prohibited to ensure safety when refueling.
- Do not fill above fuel upper limit when refueling. Otherwise, fuel will flow out through a hole on the cap that may damage the body's painting, in serious cases, it may cause a fire to burn down the scooter.
- Make sure the cap has been tighten properly.
- This model has a reserve tank device. The fuel indicator will not move before the fuel in the reserve tank running out. After the fuel in the reserve tank running out, it is normal that the indicator drops down a little faster.

## SAFETY HELMET HOOK

Open the seat, and hook the safety helmet chin belt onto the hook, and then lock the seat.

**CAUTION**：

- Do not hang the safety helmet onto this hook when riding to avoid damaging scooter and loosing safety helmet's function.

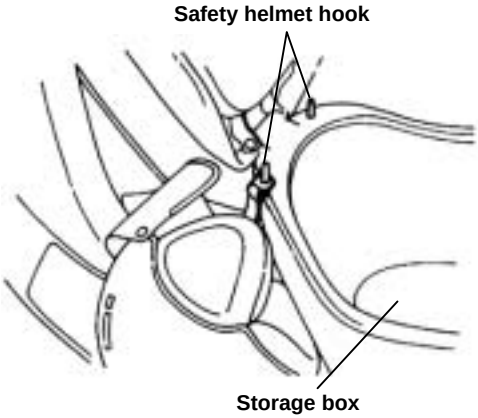


## STORAGE BOX

- This box is located under the seat.
- Maximum load capacity: 10kg.
- Do not store valuables in the box.
- Make sure that the seat has been locked completely after it was pressed down.
- Take out valuables before washing to avoid wetting these objects.

Do not place thermal sensitive objects in the box because of engine's heat and high temperature.

## BRAKE

- Avoid unnecessary sudden braking.
- Use front and rear wheel brakes simultaneously when braking.
- Avoid brake continuously for a long period of time because that may overheat the brakes and reduce its braking efficiency.
- Slow down and brake early when riding in rainy days on slippery roads. Never apply the brakes suddenly to prevent skidding and falling.
- Using only the front brake or the rear brake increases the risk of falling because the scooter is tend to pulled to one side.

**《Engine Brake》**

Return the throttle valve handle back to its original position, and apply engine brake.
It is necessary to apply both brake and engine brake intermittently when riding on a long or stiff slope.

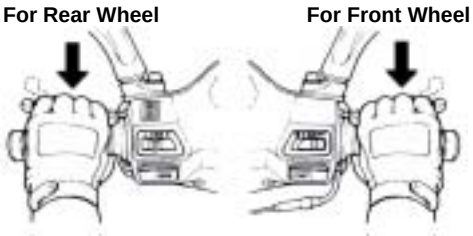

# 7. Use of Each Component

## IMPORTANT POINTS AND CAUTIONS FOR STARTING ENGINE

**CAUTION**：

- Please check the engine oil and fuel volume are adequate or not before starting engine.
  To start engine the main parking stand must be firmly on the ground and the brake is applied on the rear wheel to prevent the scooter from moving forward suddenly.

1. Turn ignition switch key to the "◯" position. Apply hand (foot) rear wheel brake.
2. Do not accelerate, press starter button when the. brake is applied.

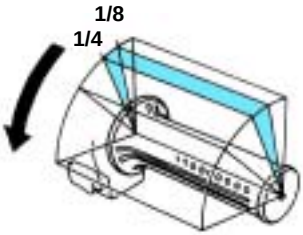


**CAUTION**：

- If engine can not be started after starter motor running for 3~5 seconds, turn the throttle valve handle 1/8~1/4 turns, and then press starter button again for an ease start.
- In order to avoid damaging the starter motor, please do not press the starter button continuously over 15 seconds.
- If engine still can not be started after pressing starter button over 15 seconds, stop and wait for 10 seconds before start it again.
- It is harder to get the engine started after the scooter has been left idle for a long time or after refueling only after the fuel has been depleted. Then, it is necessary to press starting lever or starter button several times, and keep the throttle valve handle at the close position to start the engine.
- It may need several minutes to warm up engine if it is a cold start.

**Exhaust contains harmful gases (CO), therefore please start the engine at a well ventilated place.**

### 【When starting engine with starting lever】

- After step 1 is completed, press the starting lever forcefully by foot with the throttle valve handle at the close position.
- If engine is difficult to start with the starting lever when the engine is cold, rotating the throttle valve
- 1/8~1/4 turns will make the start easier.
- Put the starting lever back to its original position after the engine has been started.

**CAUTION**：

- Firmly support the scooter with the main parking stand before starting the engine with the starting lever.
- Start engine with the starting lever occasionally to prevent it from loosing its function because of unused for a long time.

## THE BEST WAY TO RIDE OFF

- Turn on the turn signal light before moving, and make sure no vehicle is coming from behind.
  Then, ride off.

## THE CONTROL OF THROTTLE VALVE HANDLE

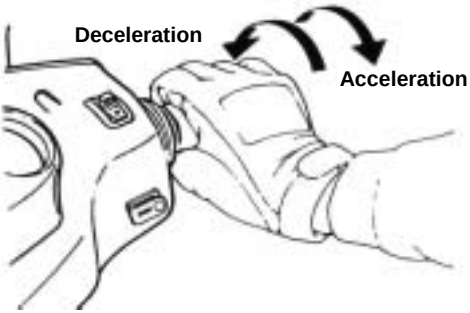


**Acceleration**：To increase speed.
When riding on an inclined road, turn the throttle valve handle slowly to allow the engine to output its power.

**Deceleration**：To decrease speed.

## PARKING METHOD

- When approaching the parking lot：
  1. Turn on the turn signal light early, and pay attention to the vehicles in front, from rear, left and right, then take the inner lane and approach slowly.
  2. Return the throttle valve handle back to its original position, and apply brakes in advance. (Brake light comes on when braking to warn riders of vehicles behind.)
- When stop completely：
  3. Press the turn signal switch back to its original position, and turn the ignition switch key to "" position to shut off the engine.
  4. Get off the scooter from left side after the engine has been stopped, and select a parking place where the scooter will not interfere with traffic and the ground is level, then put down scooter's main parking stand.
  5. Hold the steering handle with your left hand, and hold down the front end of seat or hold the parking handle on the lower-left side of seat with your right hand.
  6. Press the main parking stand with your right foot, put down the main parking stand firmly on the ground.

**To remind you**： Lock the steering handle and remove the key after parking to prevent the scooter from being stolen.

**CAUTION**：
Park your scooter at a safe place where it will not interfere with traffic.

# 8. INSPECTION AND MAINTENANCE BEFORE RIDING

## ROUTINE INSPECTION

| Check Items | | Check Key Points |
|---|---|---|
| Engine Oil | | Is there enough engine oil? |
| Fuel | | Is it enough? Is it Octane 90 or above |
| Brake | Front | Braking condition?<br>(Drum type brake lever free play: 10~20mm) |
| | Rear | Braking condition?<br>(Drum type brake lever free play: 10~20mm) |
| Tires | Front | Is tire pressure normal?<br>(Standard: 1.75kg/cm$^2$) |
| | Rear | Is tire pressure normal?<br>(Standard: 2.0 kg/cm$^2$ for 1 person, 2.25 kg/cm$^2$ for 2 persons) |
| Steering Handle | | Does the handle vibrate abnormally or is difficult to turn? |
| Speedometer, lights, and rearview mirror | | Is it operated properly?<br>Do lights come on? Can it be seen clearly from behind? |
| Tightness of Main Components | | Are screws, nuts loosen? |
| Abnormal Points | | Do the previous troubles still exist? |

⚠ **CAUTION**：
If any problem founded during routine inspection, correct the problem before using the scooter again, have your scooter checked and repaired by the **"SYM** dealer or authorized service personnel**"** if necessary.

## FUEL INSPECTION

- Turn ignition switch key to "◯" position, and check fuel gauge's needle range to make sure there is enough amount of fuel in the fuel tank.
- This scooter's engine is designed for using the unleaded fuel of octane 90 or above.
- Firmly secure the main stand on the ground, shut off the engine and keep flames away from the scooter when refueling.
- Do not fill above fuel upper limit level when refueling.
- Make sure the fuel tank cap had been tighten properly.

## ENGINE OIL INSPECTION AND CHANGE

**INSPECTION**：

1. Use the main parking stand to support the scooter on a level ground, remove the dipstick after engine stopped for 3~5 minutes. Wipe oil off the dipstick and then insert it into the guide tube again (Do not rotate it.)
2. Remove the dipstick and check whether oil level is in between the upper and lower marks.

- Add oil to upper limit if oil is under the lower limit. (Check cylinder, crankcase…etc for leakage.)

**OIL CHANGE**：

- Change engine oil after the first 300km, and change the engine oil every 3,000km thereafter. Cleaning oil filter's every 6,000km.
- In order to maintain the engine's maximum performance, check whether the engine oil is enough every 500km. Add oil to upper limit if the engine oil has been found to be inadequate.
- Engine Oil：Use API SH, SAE 10w-30 grade or better engine oil. Otherwise, damage will not be covered by warranty.

※ Recommended Oil：**SYM Genuine EXTRA 4X OIL.**
Oil Capacity：
MIO50--0.8 Liter (0.7 liters for routine change).
MIO100--0.75 Liter (0.6 liters for routine change).

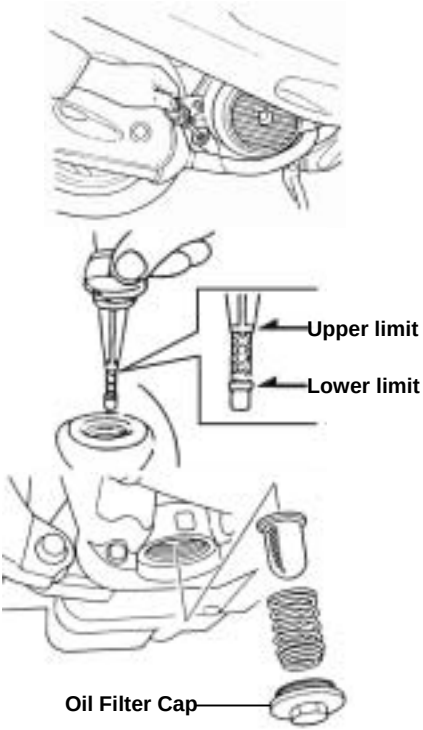


## TRANSMISSION OIL INSPECTION AND CHANGE

**INSPECTION**：

- Use the main stand to support the scooter on a level ground, after the engine stops, wait for 3~5 minutes. Remove the transmission oil infusion bolt, put a measuring glass under the drain bolt, and remove the drain bolt. Let the oil flows into measuring glass and check for decreased or not. (at disassembly：110 c.c. / at change： 90~100 c.c.).

**OIL REPLACEMENT：**

- Stop the engine and use the main stand to support your scooter on a level ground. Remove the infusion bolt and drain bolt, drain out the oil.
- Install the drain bolt and tighten it. Fill new transmission oil (90~100 c.c.), and install the infusion bolt and tighten it. (make sure that bolts are tightened and check that there's no leakage.)

**※ Recommend Oil：Genuine SYM HYPOID GEAR OIL (SAE 85W-140).**

## INSPECTION AND ADJUSTMENT OF BRAKE FREE PLAY

**INSPECTION**：(Brake lever free play must be checked with the engine shut off.)

- Brake lever free play for front and rear wheels.
  When checking the hand-braking lever for front and rear wheels, its free play (the stroke of hand-braking lever from no braking to initial braking) should be 10~20mm. It is abnormal if the feel is spongy when holding the hand-braking lever forcefully.

**Adjustment**：（**Drum type**）

The indentation of brake adjustment nut must be aligned with the pin. (see below figure)

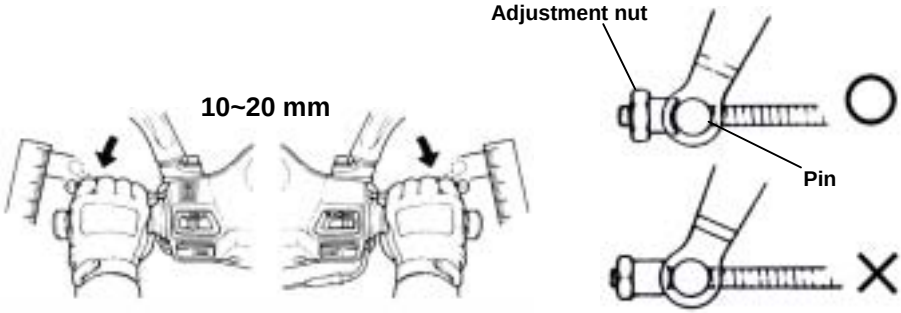


**CAUTION**：

When free play is between 10~20 mm, check brake indicators of front and rear wheels. If the arrow on the brake arm aligned with the "△" marked on the brake disk, that means the brake lining has been excessively worn, and must be replaced immediately.

Turn the adjustment nut on brake arm of front and rear wheels to adjust the free play of hand-brake lever.

- Hold the hand-brake levers after adjusting with both hands until there is effective brake feeling.
- Measure the free play with a rule.

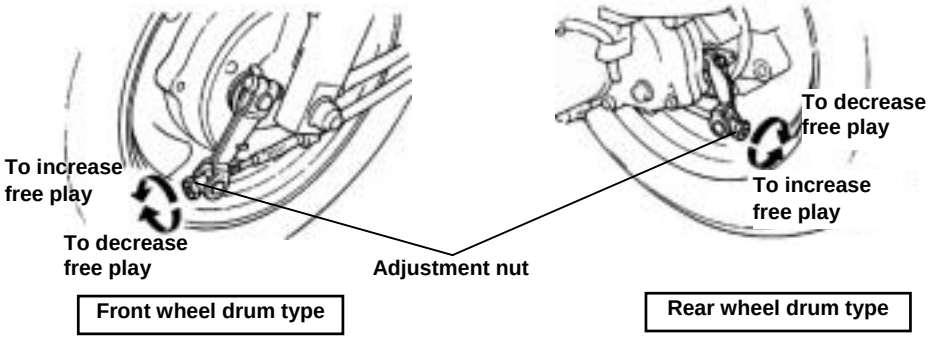

## DISK BRAKE INSPECTION

(Applicable for model equipped with disc brake.)

(Leak, damaged, looseness of brake line)
Visual check brake lines for leakage, or damage, check brake lines connections for looseness using a wrench or similar tool, and check whether steering handle vibration in riding, or any parts' interference may have damage the brake lines. If so, bring your scooter to your SANYANG dealer for repairing or service.

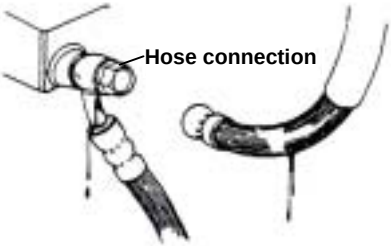


> ⚠ **CAUTION**：
> Please ride your scooter on a dry road surface slowly and operate front and rear brakes in order to find out if there is any malfunction so as to ensure the scooter is at its optimum condition and safe to ride.

**（Checking front brake lining）**

Check the brake from behind the brake caliper. The brake pad must be replaced with new lining when the brake pad wear limit reaches the brake disk.

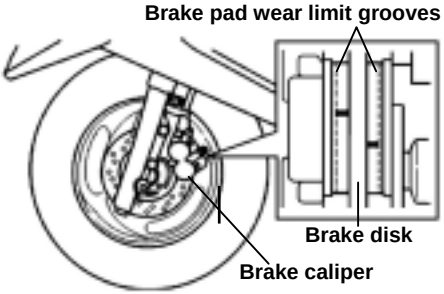


**（Checking oil quantity in brake oil reservoir）**

Park the scooter on a level ground, and check if fluid level is under the “LOWER” mark.
Recommended
Brake Fluid：WELL RUN BRAKE OIL (DOT 3).

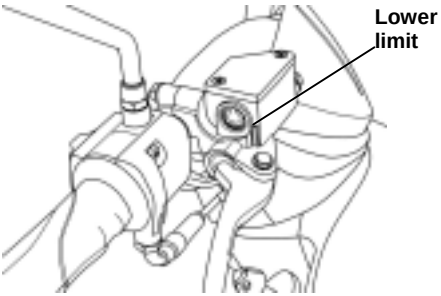


**（Replenishment of front wheel brake fluid）**

1. Loosen the screws and remove the master cylinder cover.
2. Wipe clean foreign materials , dirt around the reservoir, being careful not to let foreign materials fall into the reservoir.
3. Remove the diaphragm plate and the diaphragm.
4. Add brake fluid to upper level.
5. Install the diaphragm plate and the diaphragm, and install the master cylinder cover.
6. Please note the diaphragm direction, and do not let foreign materials fall into the reservoir.

And tighten the master cylinder cover securely.

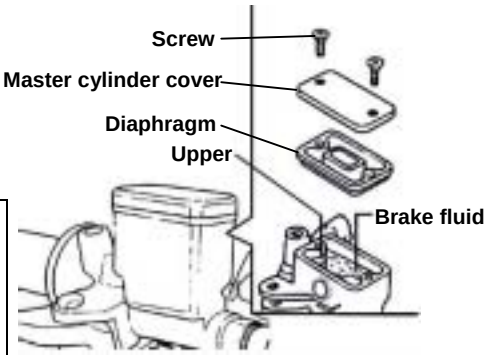


> ⚠ **CAUTION**：
> - To prevent chemical reaction, please do not use brake fluids other than those recommended.
> - Do not fill above the upper limit when adding brake fluid and avoid dropping on painting or plastic components to prevent damage.

## THROTTLE VALVE HANDLE CLEARANCE ADJUSTMENT

- Correct clearance allows throttle vale handle to rotate 2~6mm.
- Loosen the lock nut first, then turn the adjust nut to adjust. Tighten the lock nut securely when finished.

**Check Items:**

1. Check throttle valve cable to see if it can be moved smoothly from a closed position to a wide open position.
2. Rotate steering handle from side to side to check if the throttle valve cable is interfered.
3. Check to see if the throttle valve cable is obstructed by other cables preventing it from being operated smoothly.

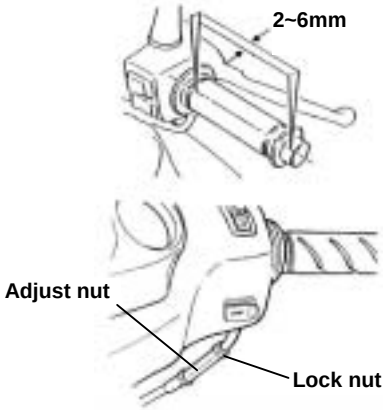


## TIRE INSPECTION

- Tires should be checked and inflated with the engine shut off.
- If a tire's ground contacting curve is abnormal, check it with an air pressure gauge and inflate it to the specified pressure.
- Tires pressure must be checked with an air pressure gauge when cold.

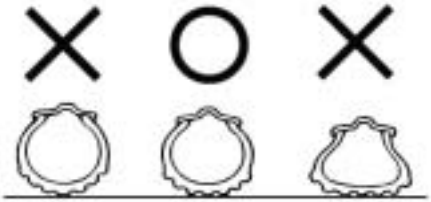

**PLEASE REFER TO SPECIFICATIONS FOR STANDARD TIRE PRESSURE**

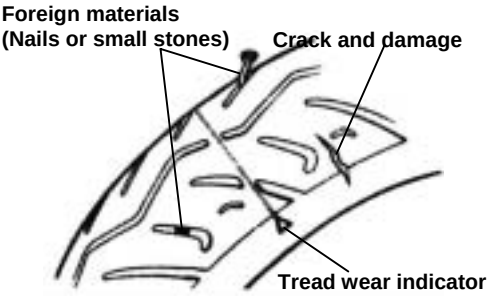


- Visual check tires for frontal and lateral side walls for crack or damage.
- Visual check tires for any nails or small stones wedged in the tread.
- Check the "tread wear indicator" condition to see if tread groove depth is insufficient.
- A tire with a wear bar showing is worn out and should be replaced immediately.

**CAUTION**：
Abnormal tire pressure, wear, or crack is the most important cause that results in the loss control of the steering handle and a punctured tire(s).

## STEERING HANDLE FRONT SHOCK ABSORBERS INSPECTION

- Perform this check with engine shut off and ignition switch key removed.
- Visual check front shock absorbers for damage.
- Operate steering handle up and down, and check front shock absorbers for noises due to bends.
- Check the bolts and nuts of front shock absorbers with wrenches for tightness.
- Shake steering handle up & down, left & right, and front & rear to check if it is loosen, has too much resistance and pulls to one side.
- Check steering handle if it is being pulled too tight by the brake cables.
- Take your scooter to SYM Authorized Dealer or Franchised Dealer for a check or adjustment if any abnormal conditions are found.

## INSPECTION AND MAINTENANCE OF BATTERY

- This scooter is equipped with a maintenance-free type battery, so it is unnecessary to check and add electrolyte. ave your scooter checked by SYM Authorized Dealer or Franchised Dealer should any abnormality is found.

**（Cleaning of battery terminals）**

Remove the battery terminals and clean if there are dirt and corrosion on them.
Battery removal procedures are as follows:

Turn ignition switch "", then open the battery cabinet door, and remove negative cable screw firstly and disconnect the negative cable. Then, remove positive cable screw and positive cable.

**CAUTION：**

- Clean the battery posts with warm water if the posts are eroded and have some white powders on them.
- If there is an obvious erosion on the terminals, disconnect the cables, then clean the erosion off with a steel brush or a piece of sandpaper.
- Install battery cable after cleaning and apply a thin coat of grease on the terminals.
  Install battery in reverse order of removal.

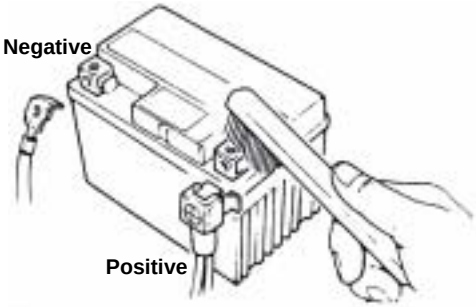


- This scooter is equipped with a maintenance-free type battery, so it is unnecessary to check and add electrolyte. Have your scooter checked by SYM Authorized Dealer or Franchised Dealer should any abnormality is found.

**CAUTION：**

- This is a closed type battery. Never remove the caps.
- In order to prevent electric leakage and self-discharge when the battery sits idle for long periods. Remove battery from scooter, store it in a well- ventilated and dimly lighted place after the battery has been fully charged. Disconnect battery's negative cable if the battery is still kept on the scooter. If the battery needs to be replaced, replace with a same closed-type battery (Maintenance-Free).

## CHECKING AND CHANGING FUSES

Turn off ignition switch, and check fuses if they are intact. Replace the blown fuse with a new one having the same specified amperage rating (7A). Using a fuse of more than 7 amperes, a brass or iron ire to replace a blown fuse is strictly prohibited to avoid damaging the electrical system and the circuit.

- Remove the storage box, and you'll find the fuse box near light.
- Open the fuse box cover, and pull out the fuse. Check it for damage or broken.
- Fuses must be firmly secured with wire connectors when replacing. Loose connections will result in overhead and damage.
- Use only parts having the specified specification to replace electrical components such as light bulbs. Using parts not having the specified specifications for replacement may cause the fuse to blow and over-discharge the battery.
- Avoid spraying water directly on or around fuse box when washing the scooter.
- Take your scooter to your dealer for an inspection if a fuse is blown by unknown causes.

**【REMOVE】**

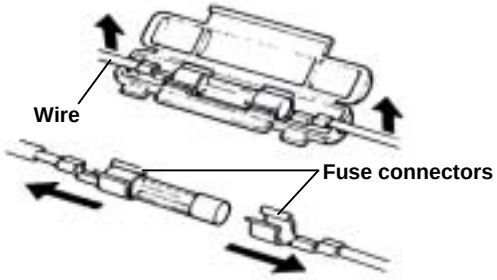


**【INSTALLATION】**

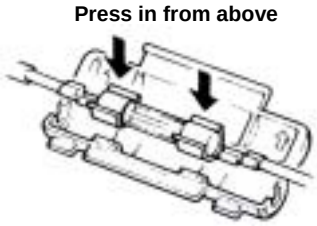


## CHECKING THE SPARK PLUG

- Remove the cap of spark plug cable (remove the spark plug using the spark plug wrench in the tool kit.
- Check the electrode if it is dirty or fouled by carbon deposits.
- Remove the carbon deposits on the electrode with steel wire, and clean the spark plug with gasoline, then, wipe dry with a rag.
- Check the electrode, and adjust its gap to 0.6~0.7 mm. (Check it with a feeler gauge)
- Hand tight the spark plug as far as it can go and then tighten it another 1/2~3/4 turns with a wrench.

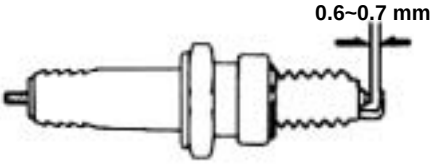


**WARNING**：
The engine is very hot after running. Pay attention not to get burned.
Use only spark plugs suitable for the engine specifications of this scooter recommended by the manufacturer. (Refer to specifications.)

## CHECKING THE FRONT AND REAR LIGHTS

- Start engine and turn on the head lamp switch. Check if head lamp and rear lamp come on.
- Check the brightness and direction of front light by wall to see if it is correct.
- Check the head lamp cover if it is dirty, crack, or loosen.

## CHECKING THE BRAKE LIGHT

- Turn the ignition switch key to "◯" position, hold the hand-braking levers for front and rear wheels.
- Check if the brake lights come on.
- Check the brake light cover if it is dirty, crack, or loosen.

**CAUTION**：

- Use only specified specification bulbs, do not use bulbs with different specifications to avoid damaging electrical system, burning out bulbs, and discharging the battery.
- Do not modify or add other electrical components to prevent over load or short circuit which may result in a fire and burn down the scooter in serious cases.

## CHECKING THE TURN SIGNAL LIGHTS AND HORN

- Turn the ignition switch key to "◯" position.
- Turn on the turn signal light switch, and make sure that the front & rear and left & right signal lights flashes and also check if the warning buzzer sounds.
- Check turn signal light covers if they are dirty, crack, or loosen.
- Press horn button to check if it works.

**CAUTION**：

- Specified specification bulbs should be used for turn signal lights. Otherwise, the normal operation of turn signal lights will be affected.
- Turn on the turn signal light before turning or switching lane to warn rider of vehicles behind.
- Turn off the turn signal light immediately by pressing its button down after using. Otherwise, the flashing of twin signal lights may confuse the riders of vehicles behind.

## CHECKING FOR FUEL LEAKAGE

- Check fuel tank, fuel cup, fuel hoses, carburetor for leakage.

## CHECING THE LUBRICATION OF BODY'S VARIOUS MECHANISMS

- Check the body's pivot points if they have enough lubrication.
  (For example, the pivot points on the main stand, the side stand, and the brake lever etc.)

## CHECKING THE AIR CLEANER

**《DISASSEMBLE PRCEDURE》**

1. Remove mounting screws from air cleaner cover.
2. Remove the air cleaner cover, then remove filter element.
3. Take the element out and clean it. (Refer to maintenance schedule.)

**《ASSEMBLE PRCEDURE》**

- Assemble the air cleaner in reverse order of disassemble.

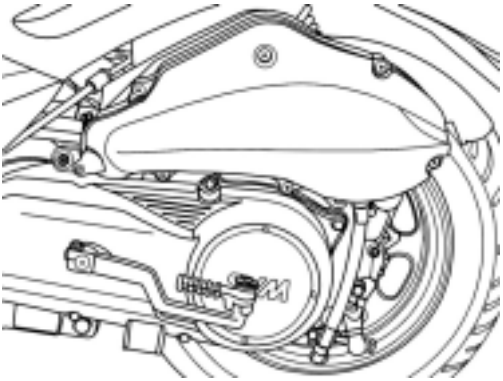

**CAUTION**：

- Dust deposit is one of the major causes of reducing output horsepower and increasing fuel consumption.
- Change the air cleaner element more frequently to prolong the engine's service life if the scooter is ride on dusty roads very often.
- If air cleaner is installed improperly, dust will be absorbed into cylinders, which may cause a premature wear and reducing output power and engine life.
- Be careful not to soak the air cleaner when washing the scooter. Otherwise, it will cause engine hard to start.

### Air cleaner element rinse:

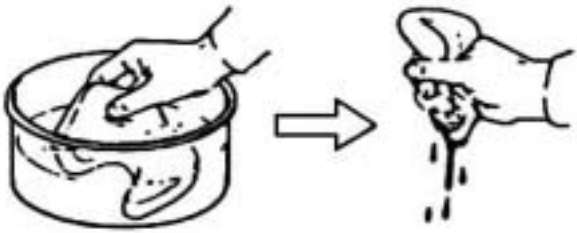

1. Drench. 2. Squeeze.

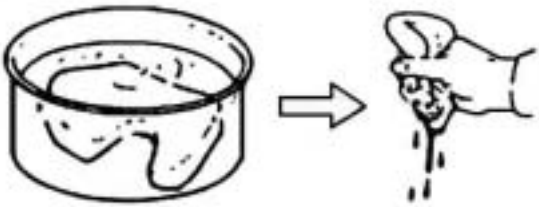

3. Drench engine oil. 4. Squeeze

## DIAGNOSIS WHEN ENGINE DOES NOT START

1. Has the ignition switch key been turned to "◯" position?

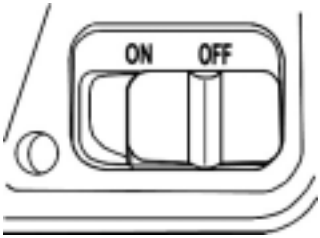


2. Anti-thief switch stir to 〝OFF〞 or 〝🔒〞 position？

3. Is there enough fuel in the fuel tank?

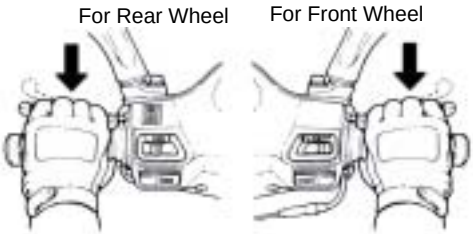


4. Is the rear or front wheel brakes applied when pressing starting button?

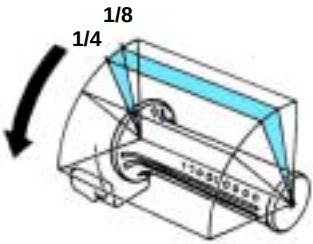


5. Do you rotate the throttle valve handle while pressing starting the button?

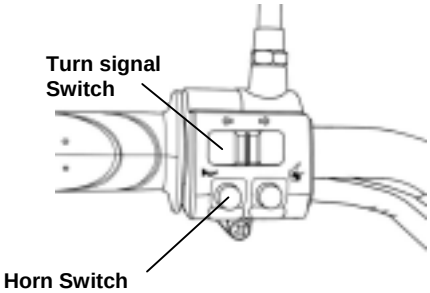


6. Turn the ignition switch key "◯", and press horn button down, if the horn does not sound, the fuse may have been blown.

【Have your scooter checked by SYM authorized dealer or franchised dealer immediately if there are no problems with the above items and engine still can not be started.】

## 10. C.D.I. ELECTRICL IGNITION SYSTEM

The charge and discharge principle of a condenser is adopted for the C.D.I system to supply electrical energy created by generator's coil, to the ignition coil in accordance with specified ignition timing so that the spark plug may generate sparks as required.

## 11. SUGGESTIONS ON ENGINE FUEL

- This scooter is designed to use UNLEADED gasoline of Octane No. 90 or higher.
- If the scooter is operated in high attitude (where the atmosphere pressure is lower), it is suggested that the air/fuel ratio should be readjusted to maximize the engine performance.

## 12. TRANSMISSION OIL

- Recommended Oil：Genuine SYM HYPOID GEAR OIL (SAE 85W-140)

## 13. CAUTIONS FOR RIDING SCOOTER

1. Raise the scooter with the main stand, and sit on the seat.
   Push the scooter forwarding to raise the main parking stand.

**CAUTION**：
Never rotate the throttle valve handle at will to increase the engine RPM before riding off.

2. Get on the scooter from the left side, and sit on the seat properly, keep your feet firmly on the ground to prevent the scooter from falling.

**CAUTION**：
Apply brake on the rear wheel before riding off.

3. Rotate the throttle valve handle slowly, and then the scooter will begin to move.

**CAUTION**：
- Rapidly rotate the throttle valve handle may cause the scooter moving forward suddenly and it is very dangerous.
- Make sure the side parking stand is spring back completely before riding off.

**【DO NOT USE THE BRAKE SUDDENLY AND MAKE A SHARP TURN】**

- Rapid braking and sharp turning will cause slip and fall.
- Rapid braking or sharp turning will cause slipping, lateral slipping, or fall especially in rainy days when the road is wet and slippery.

**【RIDE WITH EXTREME CAUTION DURING RAINY DAYS】**

- The brake distance in rain day or on wet road will longer than that on a dry road. Therefore, slow down and prepare to apply the brake earlier.
- The throttle valve handle should be released, and the brakes should be properly applied as it is needed while reducing the speed when going down a slope.

# 14. PERIODICAL MAINTENANCE SCHEDULE

| Item | Check Items / Maintenance kilometer | 300KM | Every 1000KM | Every 3000KM | Every 6000KM | Every 12000KM | Remarks |
|---|---|---|---|---|---|---|---|
| | Maintenance Interval | NEW | 1 Month | 3 Months | 6 Months | 1 Year | |
| 1 | Air cleaner element (Remark) | I | C | | R | | Paper type |
| 2 | Oil filter (Screen) | C | | | C | | |
| 3 | Engine oil | R | I | Replacement for every 3000KM | | | |
| 4 | Tire, pressure | I | I | | | | |
| 5 | Battery | I | I | | | | |
| 6 | Spark plug | I | | I | | R | |
| 7 | Carburetor (idle speed) | I | | | I | | |
| 8 | Steering bearing and handles | I | | I | | | |
| 9 | Check Transmission for leakage | I | I | | | | |
| 10 | Check crankcase for leakage | I | I | | | | |
| 11 | Transmission Oil | R | Replacement for every 5000KM(5 Months) | | | | |
| 12 | Ride Belt / roller | | | | I | R | |
| 13 | Fuel tank switch and lines | I | | I | | | |
| 14 | Throttle valve operation and cable | I | I | | | | |
| 15 | Engine bolts and nuts | I | | I | | | |
| 16 | Cylinder head, cylinder, and piston | | | | I | | |
| 17 | Exhaust system/cleaning carbon | | | | I | | |
| 18 | Cam Chain / ignition time | I | | I | | | |
| 19 | Valve clearance | I | | | I | | |
| 20 | Shock absorbers | I | | | I | | |
| 21 | Front/rear suspension | I | | | I | | |
| 22 | Main/side stands | I | | | I/L | | |
| 23 | Crankcase Blow-by system (PCV) | I | | I | | | |
| 24 | Clutch weight | | | | I | | |
| 25 | Brake mechanism/brake pad | I | I | | | | |
| 26 | Bolts/nuts for each components | I | I | | | | |

☆ The above maintenance schedule is established by taking the monthly 1,000 kilometers as a reference which ever comes first.

※ Have your scooter checked and adjusted periodically by your SYM Authorized Dealer or Franchised Dealer to maintain the scooter at the optimum condition.

Code： I ~ Inspection, cleaning, and adjustment　　R ~ Replacement

C ~ Cleaning (replaced if necessary)　　L ~ Lubrication

Remark：1. Clean or replace the air cleaner element more often when the scooter is operated on dusty roads or in the Heavily- polluted environment.

2. Maintenance should be performed more often if the scooter is frequently operated in high speed and after the scooter has accumulated a higher mileage.

**【Notes in the remarks are used to indicate the applicable models.】**

# 15. SPECIFICATION

| Item \ Model / Specification | HU05 SERIES | HU10 SERIES (DRUM TYPE) | HU10 SERIES (DISK TYPE) |
|---|---|---|---|
| Length | 1710 mm | 1720 mm | |
| Width | 650 mm | | 720 mm |
| Height | 1005 mm | 1020 mm | |
| Wheel base | 1170 mm | 1220 mm | |
| Net Weight | 80 kg | 87.5 kg | |
| Type | 4- stroke single cylinder engine | | |
| Fuel | UNLEADED (OCTANE 90 OR HIGHER) | | |
| Cooling type | Air - cooled | | |
| Displacement | 49.5 cc | 101 cc | |
| Compression ratio | 12.6：1 | 10.5：1 | |
| Max. HP | 2.8 kw / 8000 rpm | 5.7 kw / 8000 rpm | |
| Max. torque | 3.73 Nm / 6500 rpm | 7.5 Nm / 6500 rpm | |
| Starting methods | Electrical & foot type | | |
| Front shock absorber | TELESCOPE | | |
| Rear shock absorber | UNIT SWING | | |
| Clutch | Centrifugal type | | |
| Transmission | CVT | | |
| Front tire | 3.0 – 10 - 42J | 90/90-10 – 50J | |
| Rear tire | 90/90-10 – 50J | | |
| Wheel | Steel | | |
| Tire pressure | Front: STD 1.75 kg/cm$^2$ | | |
| | Rear: STD 2.0 kg/cm$^2$ for 1 person, 2.25 kg/cm$^2$ for 2 person | | |
| Front brake | Drum type (Ø 110 mm) | | Disk type (Ø 160 mm) |
| Rear brake | Drum type (Ø 95 mm) | Drum type (Ø 110 mm) | |
| Front light bulb (high, low) | 12V 30W / 30W ×1 | | |
| Brake light bulb (tail light) | 12V 5W / 18W | | |
| Turn signal light bulb | 12V 10W | | |
| Speedometer light bulb | 12V 3.4W ×2 | | |
| Engine oil capacity | 0.8 L (0.7 L for change) | 0.75 L (0.6 L for change) | |
| Transmission oil capacity | 100 cc. (90 cc. for change) | 110 cc. (100 cc. for change) | |
| Fuel tank capacity | 4.8 L | | |
| Fuse / Spark plug | C6HSA (NGK) | | |
| Battery capacity | 12V 4Ah (closed type, maintenance-free battery) | | |
| Air cleaner | Sponge type | | |
| Fuel tank cap | Switch control auto-open type | | |
| Front light | General type (single) | | |
| Rear grab frame | Can not load cargo | | |

SYMEN 2004/08